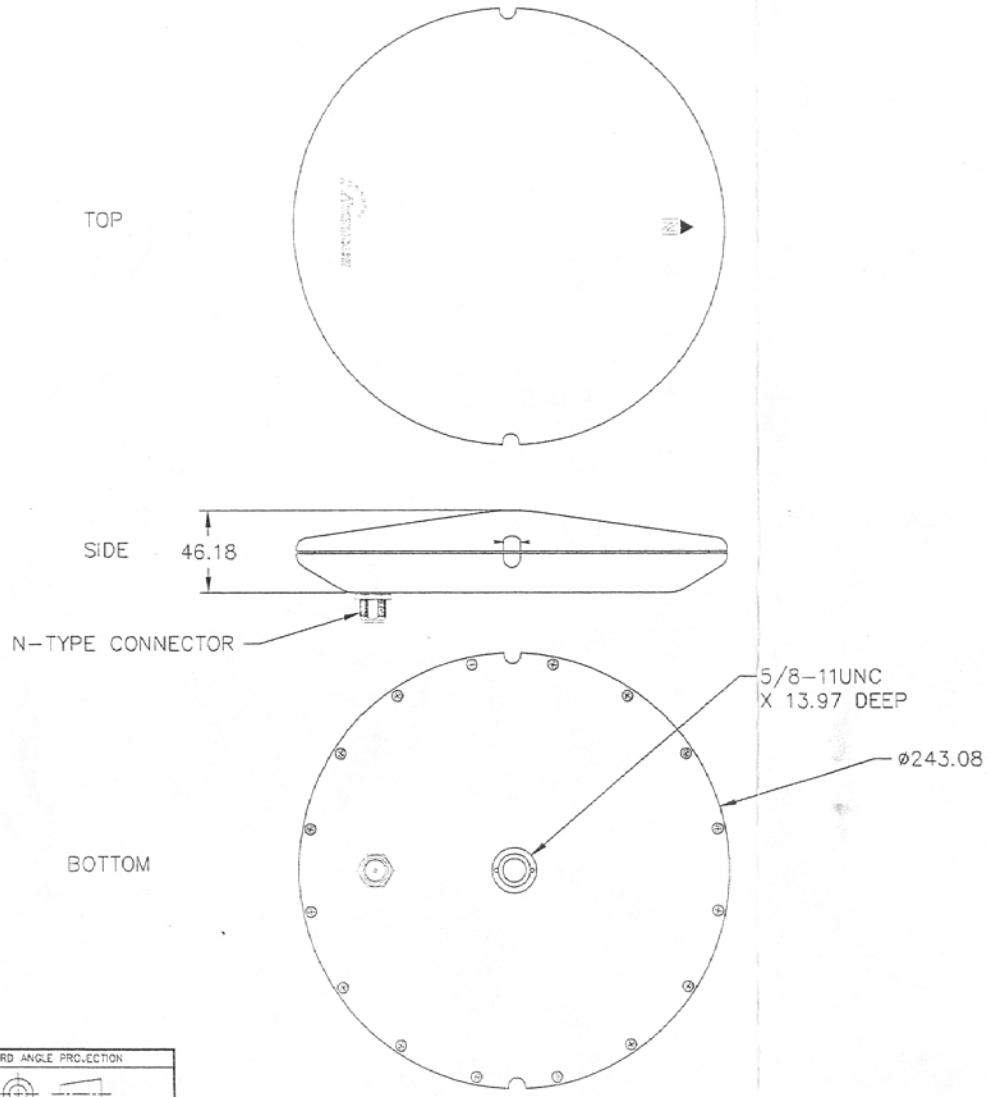

ELECTRICAL CHARACTERISTICS	
FREQUENCY	L1 1575.42 ± 10.23MHz L2 1227.60 ± 10.23MHz
POLARIZATION	RHCP
ANTENNA GAIN	5.2 dBiC
DC POWER	5–15V, 45mA TYP
LNA GAIN L1	38dB ± 3dB
LNA GAIN L2	39dB ± 3dB
OUTPUT	50 OHM, TYPE N
HUMIDITY	100%
TEMPERATURE	−40°C TO +65°C
WEIGHT	0.96 kg

NOTES:

1. DIMENSIONS ARE IN MILLIMETERS ONLY.

THIRD ANGLE PROJECTION

TOLERANCES UNLESS OTHERWISE SPECIFIED
DEC ANGLES
0.X ± 0.2
0.XX ± 0.12
BRACKETED DIMENSIONS ARE IN MILLIMETERS

MATERIAL: N/A

FINISH: N/A

APPROVALS		DATE
DRAWN	P. McCANN	7-14-95
CHECKED		
UPDATED	P. McCANN	8-16-95

ASHTECH SUNNYVALE, CA 94086

MARINE III ANTENNA
L1/L2

SIZE	PART NO.	FILE NO.	REV
B	700700	670013	X

SCALE: NONE | DO NOT SCALE DRAWING | SHEET 1 OF